Module 0 Homework 3 Challenge

Provide the best answer for each of the following questions.

Time Remaining 00:59:12

Main Question Set

Solve six of the first ten questions to achieve a passing score of 60%. Don't miss the learning opportunity in the rest of the problems, though -- spend the full time and attempt every one of them!

1

Review Later

If you go 180 miles at a speed of 60 miles per hour, how many hours do you travel?

- 60^{180}
- $60 - 180$
- π
- $180 \div 60$
- 18060

2

Review Later

Which one of these numbers is a factor of 12?

- 6
- 24
- 36
- 120
- π

3

Review Later

Is the product $31 \times 27 \times 161 \times 3$ odd or even?

- Odd
- Even

4

Review Later

A group of kids from the Movie Appreciation Club bought several $\$7$ movie tickets for a total of $\$301$. Later, more kids joined the club and also bought $\$7$ movie tickets. The total amount became $\$343$. How many kids joined in the second phase?

5

Review Later

If you run towards a faraway friend at 5 miles per hour and she bikes towards you at 15 miles per hour, how many miles closer are you to each other after 1 hour? (Your answer should be the number only.)

6

Review Later

If the area of a circle is 9π, what is its diameter?

- 100
- π
- 81π
- 6
- -6

7

Review Later

Candidates A and B are running in an election with 100 voters. If 30 people will vote for Candidate A, what is the probability that a randomly chosen voter will vote for Candidate B, if each voter is equally likely to be chosen?

- $\frac{1}{7}$
- 0.7

- 0.007
- 127
- -3

8

Review Later

How many factors does $2^4 \times 3 = 48$ have?

- The prime factorization has 4 twos and 1 three, so there are $4 \times 1 = 4$ factors
- The prime factorization has 4 twos and 1 three, so 48 has $4 + 1 = 5$ factors
- The prime factorization is made up purely of powers of 2 and 3, so it has $2 \times 3 = 6$ factors
- The prime factorization has 4 twos and 1 three, so 48 has $(4 + 1) \times (1 + 1) = 10$ factors
- One quarter of the numbers less than 48 divide it, so it has $48 \div 4 = 12$ factors

9

Review Later

A car company makes three types of cars: sedans, SUVs, and minivans. They come in two colors: gray or blue. Of the cars, 30% are sedans, and of those sedans, 60% are painted gray. You randomly pick a car, with all cars being equally likely. What is the percent chance that the car is a blue sedan? Round your answer to the nearest whole percent, and don't write the % sign. (In other words, if the answer is 31.4%, you would type in 31.)

10

Review Later

It takes 2 hours to drive from your town to the next town at 55 miles per hour. Today you are in a hurry and drive 5 miles per hour faster. How many minutes does it take to drive today? (Your answer should be the number only.)

Bonus Challenge Questions

These optional questions will not count towards your final score. However, we strongly suggest trying them for the benefit of the challenge!

11

Review Later

A line of 1000 switches are all set to off. Person 1 enters the room and flips every switch. Person 2 enters and flips every 2nd switch. Person 3 enters and flips every 3rd switch. This keeps on going, ending with Person 1000 flipping every 1000th switch (which is just the very last switch). Then, lightning strikes, and the first 100 switches in the line break (they turn off if they were on, and stay off otherwise). Which one of these equals the number of switches that are still on?

- The number of perfect squares less than or equal to 1000
- The number of numbers from 1 to 1000 with an odd number of factors
- The number of primes from 101 to 1000
- The number of numbers from 101 to 1000 with an even number of factors
- The number of perfect squares from 101 to 1000

12

Review Later

You are standing still and observe trains coming towards you and passing by every hour at 60 miles per hour. You start biking at 15 miles per hour towards where the trains come from. From your perspective, what is the relative speed of the trains toward you now in miles per hour? (Your answer should be the number only.)

13

Review Later

You're driving down the interstate and get caught by a police officer for speeding. However, your speedometer showed you traveling at exactly 60 miles per hour, the speed limit. A burst of inspiration tells you that you actually were going faster than 60 miles per hour, because your tires were over-inflated! Instead of their normal 30 inch diameter, your tires have a diameter of 33 inches today. Your speedometer was wrong because it calculates speed based only on the spin rate of the tire, assuming that your tire's diameter is the normal 30 inches. How many miles per hour were you actually going? (Your answer should be the number only.)

Note: Your speedometer takes the spin rate of the tire in full rotations per unit time, and multiplies it by the circumference of a 30-inch diameter tire.

14

Review Later

A chain runs over 6 gears in the pattern shown. Each gear has circumference 2 inches, the distance between the center of the top left gear and the center of the bottom left gear is 35 inches, and the distance between the center of the top middle gear and the center of the bottom middle gear is 5 inches. How many inches long is the chain? (Your answer should be the number only.)

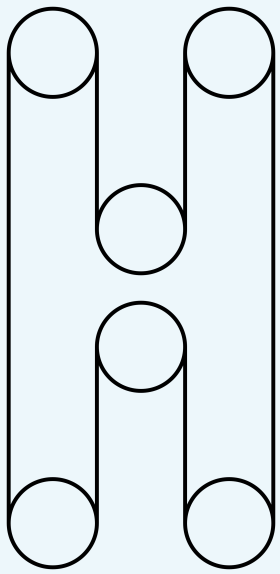

15

Review Later

Alice starts jogging home from school at 8 miles per hour. One minute later, Bob sees that she had left her purse behind. He spends 15 seconds unlocking his bike, and then starts riding after her at 12 miles per hour.

If you were an ant riding on Alice, Alice would appear to be not moving, and Bob would appear to be the only one moving. The ant would think Bob is moving towards Alice. Bob's *relative*

speed to Alice is the speed that the ant thinks Bob is moving towards Alice, and it is a positive number. What is the ratio of Bob's *relative* speed to Alice's *actual* speed? Enter your answer as a fraction in lowest terms with no spaces.

16

Review Later

A standard running track is in the shape of 2 semicircles, joined by two straightaways. The innermost semicircles each have radius r, and all straightaways have length m. The track has 4 lanes encircling each other, and each lane has width w. What is the difference in length between the distance run around the track in the center of the innermost lane and the center of the outermost lane?

- $2\pi r + 2m$
- $2\pi \times 3w$
- $2\pi \times 3w + 2m$
- $2\pi \times 4w$
- $2\pi \times 4w + 2m$

17

Review Later

You are standing still and observe trains coming towards you and passing by every hour at 60 miles per hour. You start biking at 15 miles per hour towards where the trains come from. How many minutes are there between times when successive trains pass by you now? (Your answer should be the number only.)

Super Bonus Questions

These questions are an extreme challenge! Some of the most interesting, creative and clever questions are the hardest ones. So try every single one. Even if you can't figure it out, you'll still be deepening your understanding of the important math concepts that underlie this course.

18

Review Later

Alice starts jogging home from school at 8 miles per hour. One minute later, Bob sees that she had left her purse behind. He spends 15 seconds unlocking his bike, and then starts riding after her at 12 miles per hour. From the moment Bob starts riding, how many seconds will it take him to catch up with Alice? (Your answer should be the number only.)

19

Review Later

Suppose it rains 20% of the time and you wear your poodle shirt 40% of the time, and the shirt you wear doesn't influence whether it rains (it's not magic). What is the percent chance that it rains, or you wear your poodle shirt, or both? (Enter just a number, without a % sign.)

20

Review Later

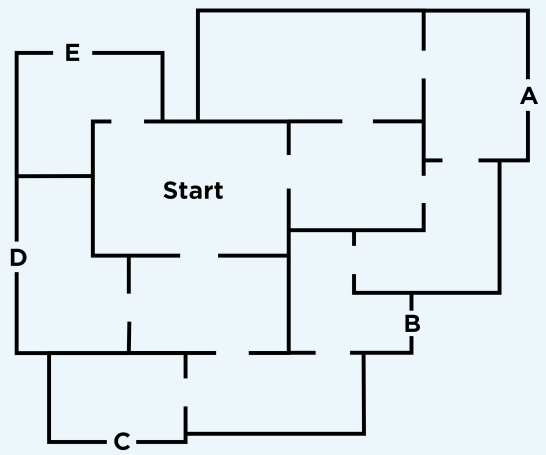

You wake up suddenly to find yourself in a strange building (see above floor plan), in the room marked Start. How can you find your way out? You must always enter a random door to a room you haven't yet been in until you find a room with an exit, at which point you leave. What

is the probability that you exit the building via the exits A, B, or C, expressed as a fraction in simplest form with no spaces?

(Note that with these rules and this floor plan, you will always eventually exit the building.)

View Marked Questions

Finished

Software by
brillium
Version 11.2

Privacy Policy. Assessment content is copyright 2026, Expii, Inc..